SYLTON®



OBSERV® 520*x*

Quick set-up Manual

Table of contents

1. Device overview and terminology 4

1.1 Observ 520x 4

1.2 Accessories 6

2. Safety warnings and cleaning instructions 8

2.1 Important safety warnings 8

2.2 Important usage warnings 8

2.3 Cleaning instructions 8

2.3.1 Chinrest 9

2.3.2 Polarisation visor 9

2.3.3 Lightshade 10

2.3.4 iPad visor 10

3. Getting the Observ ready for use 11

3.1 Setting up the device 11

3.1.1 Setting up the Universal iPad visor 16

3.2 Getting the Software ready for use 19

3.2.1 Downloading the Observ App 19

3.2.2 Personalising the App 19

3.3 Pairing / Unpairing your device 20

3.3.1 First time pairing 20

3.3.2 Selecting an Observ from multiple paired devices 21

3.3.3 Unpairing a device 21

3.4 Activation of the voucher 21

4. The Observ in use 23
4.1 Starting a consult 23
4.2 Ergonomic client setting 23
4.3 Using the chinrest for side view pictures 24
4.4 Placing the lightshade 25
4.5 Positioning your client 26
4.6 Manual mode 27
4.6.1 Using the polarisation visor 27
4.6.2 Manual mode operation 27
4.6.3 Light mode intensity 28
4.6.4 Display states 29

5. Trouble shooting 30

6. Declaration of conformity 31

7. Regulatory information 33

8. Technical information 35



Before using your Observ, carefully read this manual and retain it for future reference. This document is provided for information purposes only, and the contents hereof are subject to change without prior notice.



This product contains UV light sources.



Should this product reach the end of its life cycle, do not dispose of it into the normal household waste. Rather take it to a collection point for the recycling of electrical and electronic equipment.

1 Device overview and terminology

1.1 Observ 520x

A. Visor mount
B. Light mode buttons
C. Display
D. Power connector
E. Power button
F. Intensity button
G. Barrel
H. USB connector
I. Security slot

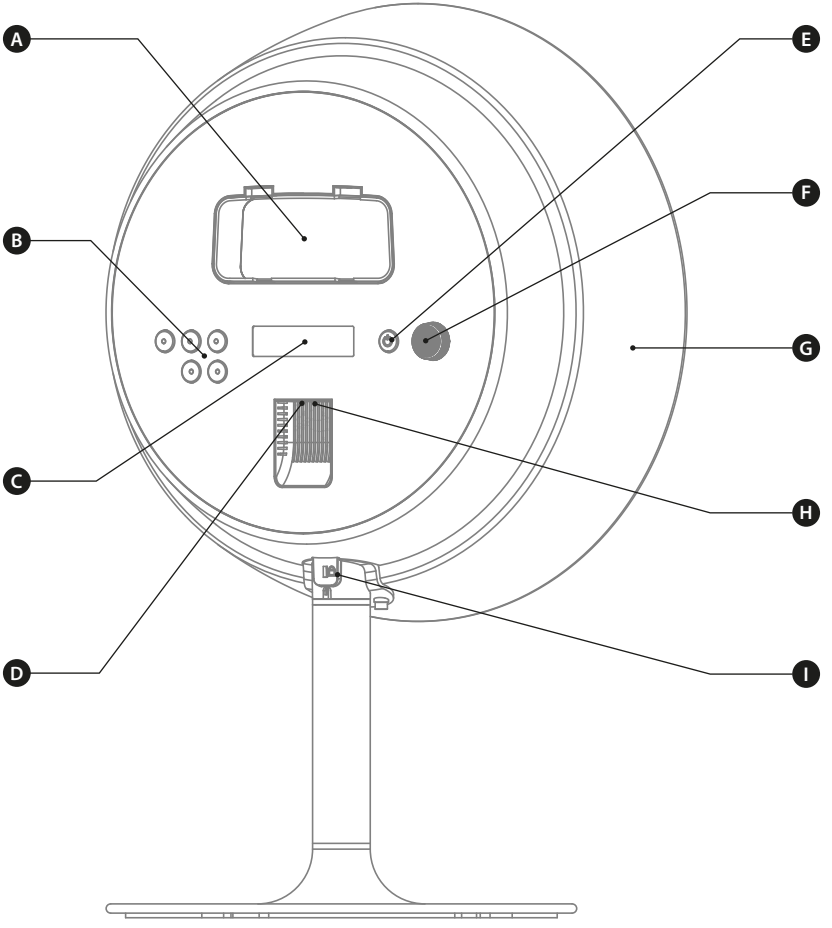

J. Reflector
K. Face Positioning System (side)
L. Light emitter front
M. Rotatable chinrest
N. Light emitter side
O. Face Positioning System (front)
P. Client mirror
Q. Rod
R. Base

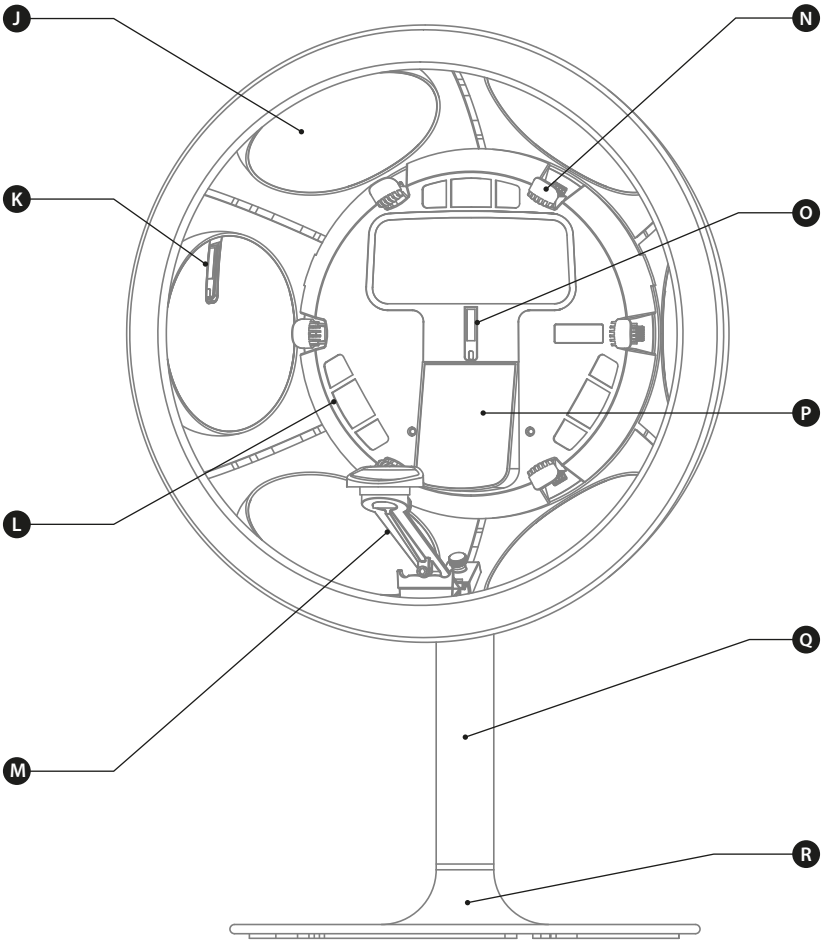

1.2 Accessories

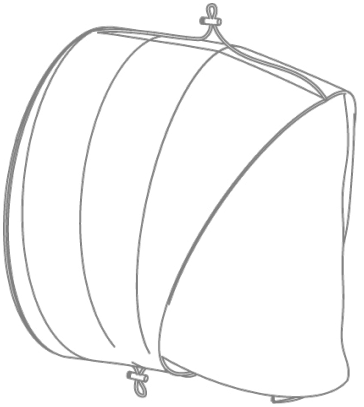

Lightshade

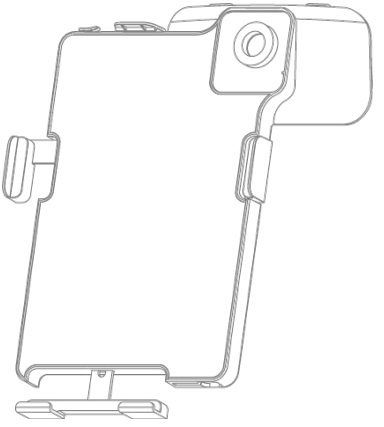

Universal iPad visor

Adapter

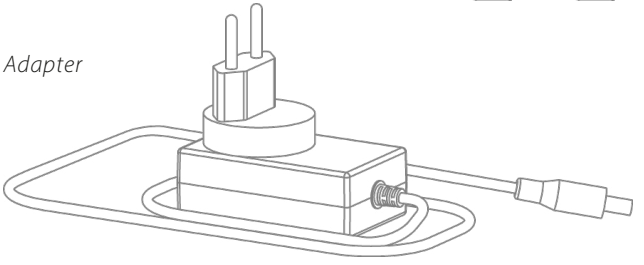

USB cable
USB-A to USB-C

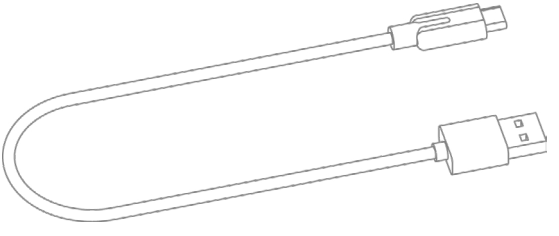

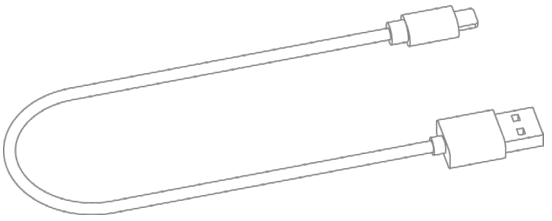

USB cable USB-A to Apple Lightning

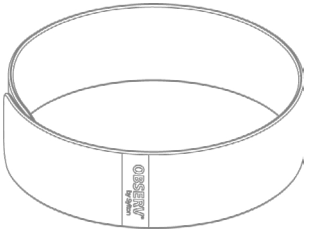

Headband



Cape

Microfiber cloth



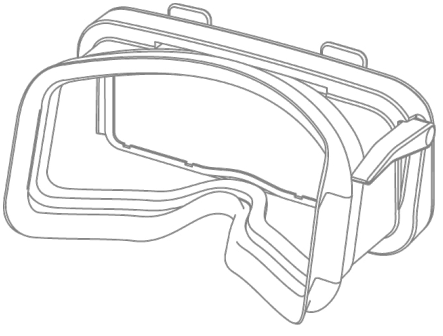

Polarisation visor

2 Safety warnings and cleaning instructions

2.1 Important safety warnings

- **Do not use the device on people with an abnormal sensitivity to (UV) light (e.g. photophobia) or people with abnormally sensitive eyes (e.g. after cataract surgery) that may need to avoid any source of UV light.**
- **Eye discomfort warning:** Some people may experience eye strain and temporary discomfort. A temporary condition which is caused by the difficulty of the human eye to focus (squints) in low light environments.
- **No serviceable parts inside:** The device should be serviced by authorized personnel only. If the device doesn't operate satisfactory, please contact your distributor.
- **Do not touch the insides of the light and UV emitters!**

2.2 Important usage warnings

- Do not place the device on an unstable surface.
- Do not use the device in or near water.
- Do not allow liquids or foreign objects to enter the device. This could result in fire or an electrical shock.
- Do not place the device under direct sunlight, near heating or cooling devices.
- Do not use the device in an area where humidity is high.
- Always use the supplied adapter to power the device.
- This equipment is not suitable for use in locations where children are likely to be present.

2.3 Cleaning instructions

To clean the Observ and accessories please follow the instructions below.

- Use a damp cloth for cleaning the outer housing and stand of the Observ.
- The supplied microfiber cloth can be used to clean the surfaces of the reflectors and client mirror.

Important maintenance warnings!

- **Never** clean the light emitters and Face Positioning System with any fluids!
- **Never** clean the device with abrasive cleaners or organic solvents like benzene, acetone or thinner.

2.3.1 Chinrest

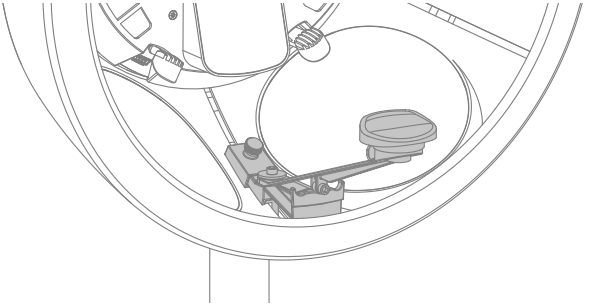

When using the chinrest, disinfect the pedestal with a soft moist medical disinfectant wipe (with a maximum of 70% isopropyl alcohol).
Do not use on other surfaces!

2.3.2 Polarisation visor

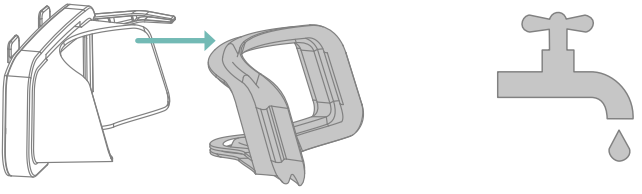

- Remove the rubber eye piece from the visor.
- Use hand warm water with mild detergent to clean the visor.
- Rinse well after cleaning.
- Make sure the rubber eye piece is dry before placing it back on the visor.

2.3.3 Lightshade

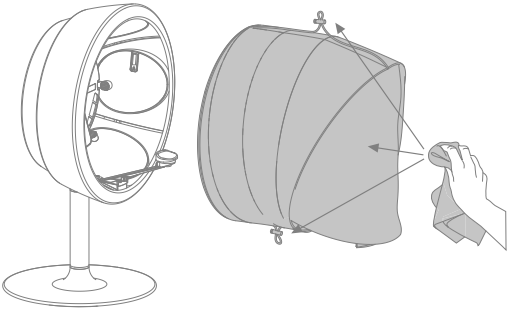

- Remove the lightshade from the Observ.
- Use a damp cloth for cleaning the lightshade.
- To clean tenacious stains, use warm water on a cloth with a mild detergent.

Important maintenance warnings!

- **Never** wash the lightshade in a washing machine.
- **Never** dry the lightshade in a dryer.



2.3.4 iPad visor

When you notice the window in the iPad visor has stains clean the window on both sides with the microfiber cloth. To clean tenacious stains, use hand warm water.

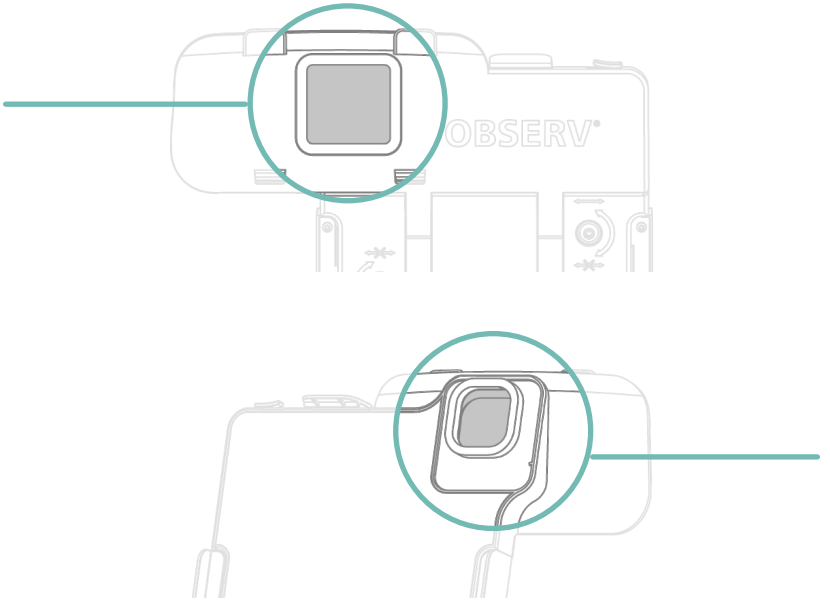

3 Getting the Observ ready for use

3.1 Setting up the device

To safely set-up your Observ, follow the steps below.

1. Place the Observ carrying bag on a flat surface.

2. Open the Observ carrying bag and remove the accessory bag.

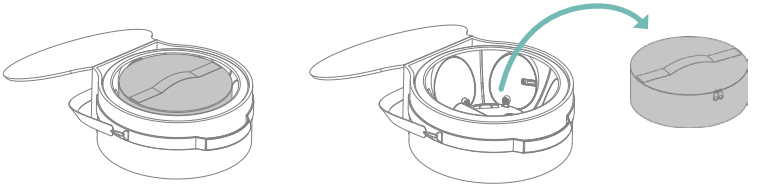

3. Open the accessory bag and take out the base of the Observ. Place the base of the Observ on a flat and stable surface.

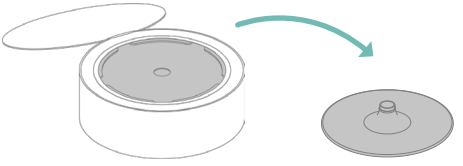

4. Screw the rod on the base to create the stand of the Observ. Attach the plug type, compatible with the mains socket of your country, to the adapter. Pull the cable of the adapter through the stand. The adapter automatically converts to the right voltage of your country.

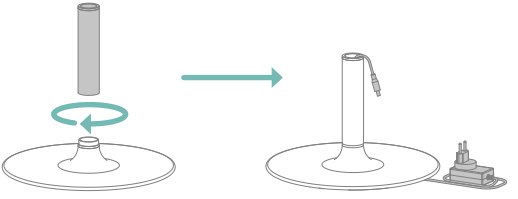

5. Place the Observ onto the rod.
Make sure the cable from the adapter is placed through the opening (A) of the connection part of the Observ.

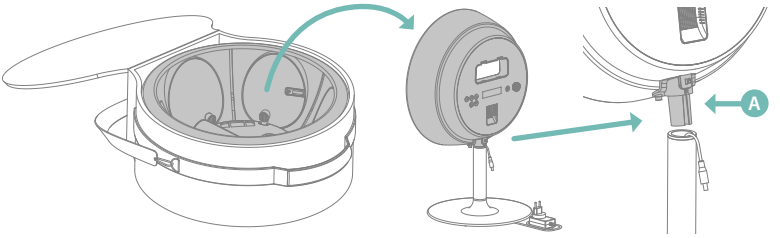

Plug the adapter in the Observ as illustrated below:

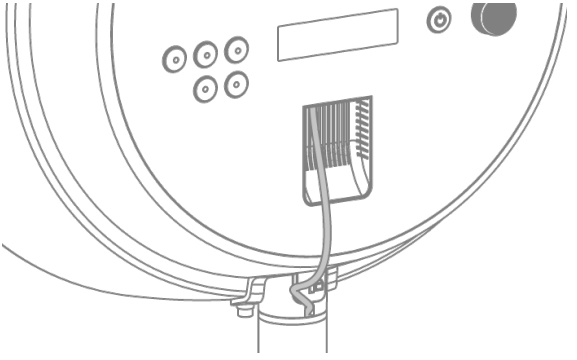

6. The Observ offers the possibility to charge your iPad by placing the supplied USB cable in the USB connector slot in the Observ. Connect the other end to your iPad.

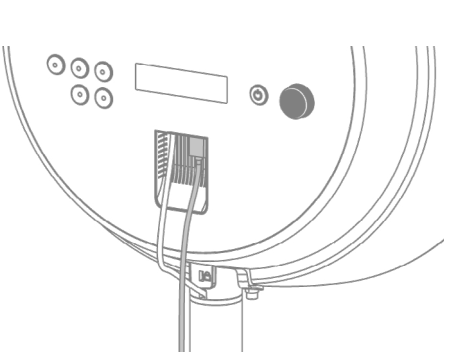

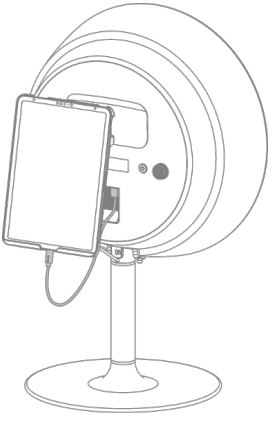

If desired, a universal anti-theft lock cable can be mounted inside the slotted hole.

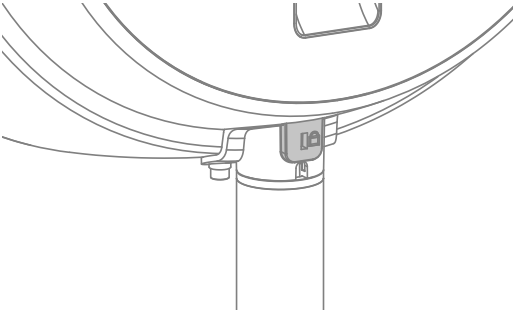

7. Remove the foil from the window inside the Observ and the screen on the back of the Observ.

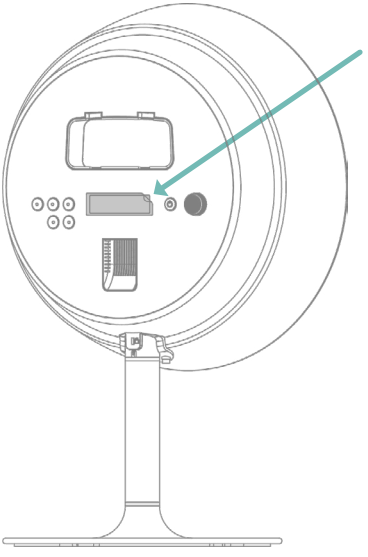

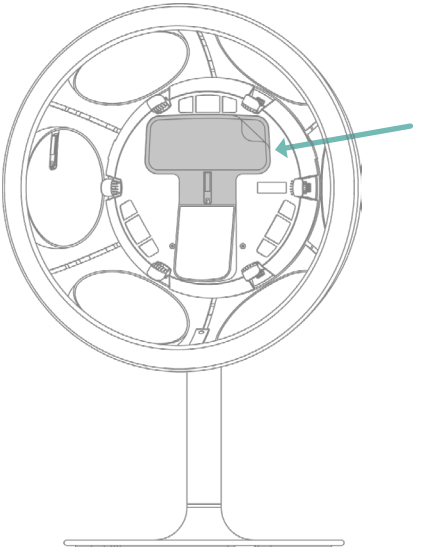

8. For optimal imaging results always use the provided chinrest to position your clients face correctly in the Observ.

To attach the chinrest simply slide the chinrest (A) over the mount (B) inside the Observ. Slide the chinrest until it stops and secure it by tightening the screw (C).

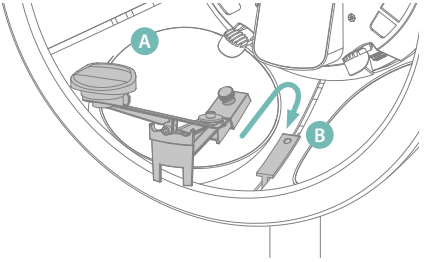

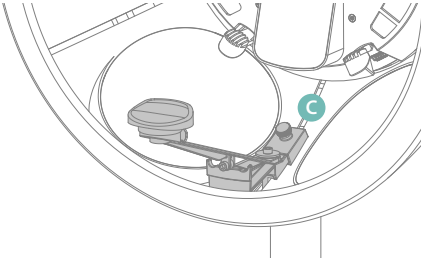

9. Attaching the lightshade
The lightshade is used to block all interfering light coming from outside the Observ.

The lightshade is positioned as shown in the drawing below. When the magnets of both the lightshade and the Observ are aligned the lightshade will snap into place.

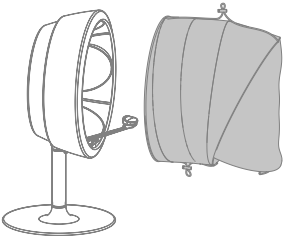

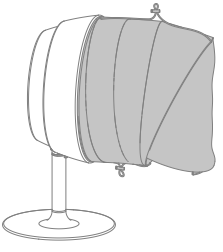

10. Attaching the visor

a. Universal iPad Visor

Use the following steps to attach the Universal iPad Visor correctly onto the Observ.

1. Move the visor towards the back of the Observ.
2. Hook the visor in the top openings of the Observ and tilt the visor to attach the bottom hooks to the Observ.
3. Slide down the visor firmly until you hear a click.

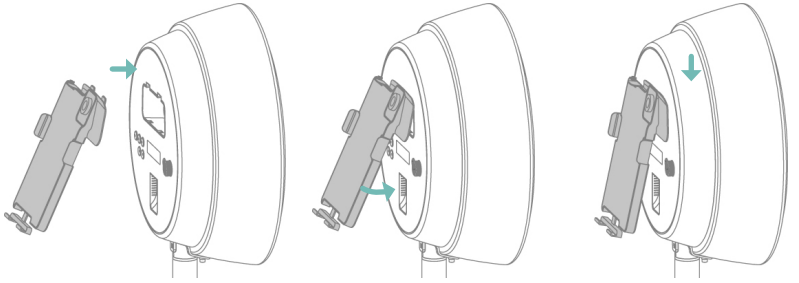

b. Polarisation visor

Use the following steps to attach the visor correctly on the Observ.

1. Move the visor towards the Observ.
2. Hook the visor in the top openings of the Observ and tilt the visor to attach the bottom hooks to the Observ.
3. Slide down the visor firmly until you hear a click.

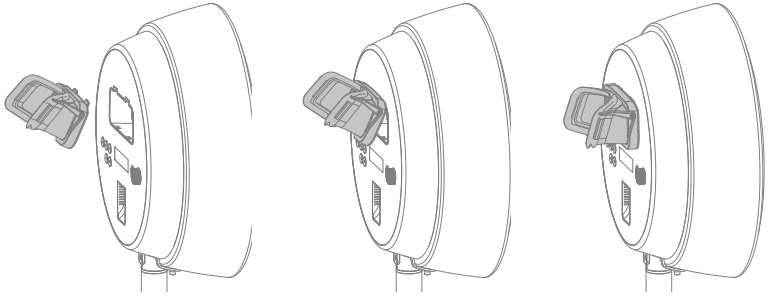

3.1.1 Setting up the Universal iPad visor

1. Before using, check if the iPad is compatible with the Observ.

2. Check the type of camera on the iPad and get the matching sticker A, B or C.
In case of doubt, please contact your distributor.

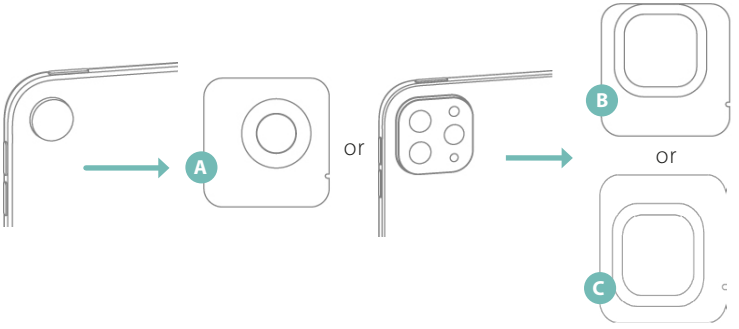

3. Remove the backing of the sticker before attaching it to the Universal iPad Visor. Pay attention to match the notch in the sticker with the rib on the Universal iPad Visor.

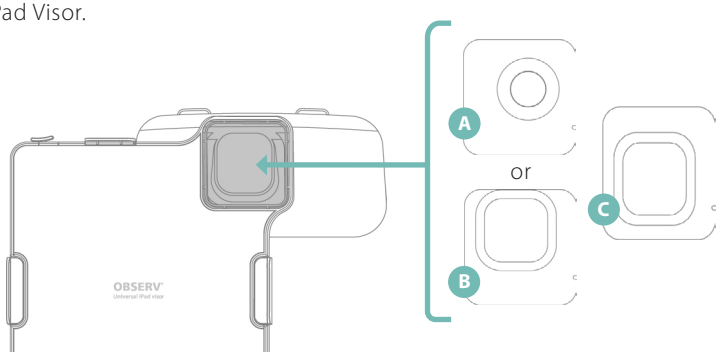

4. An allen key is positioned at the bottom of the Universal iPad Visor. Remove it.

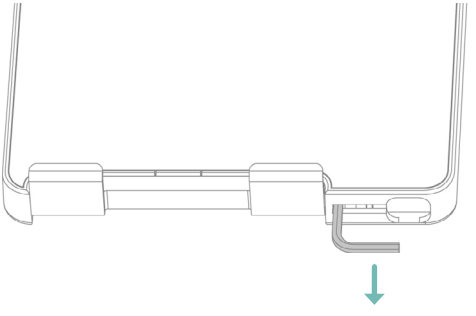

5. Use the allen key to untighten the 3 screws on the back of the visor. And slide out the arms.

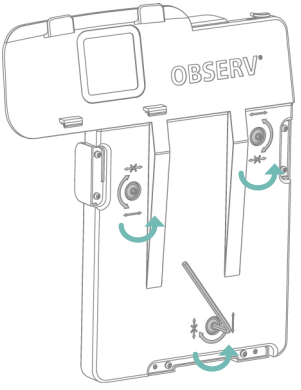

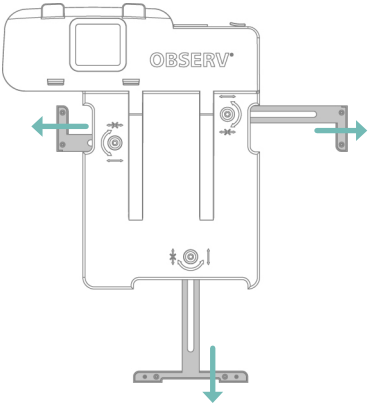

6. Hold the Universal iPad Visor in an upstanding position on a flat surface. Place the iPad inside the visor. Check the back and make sure the camera of the iPad is centered with the opening of the sticker.

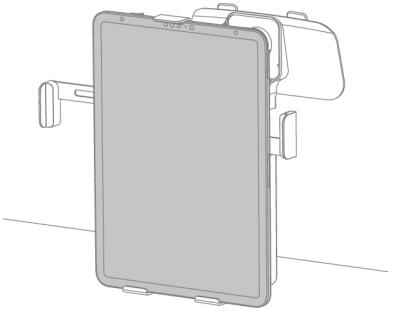

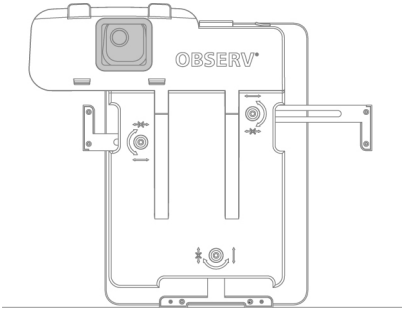

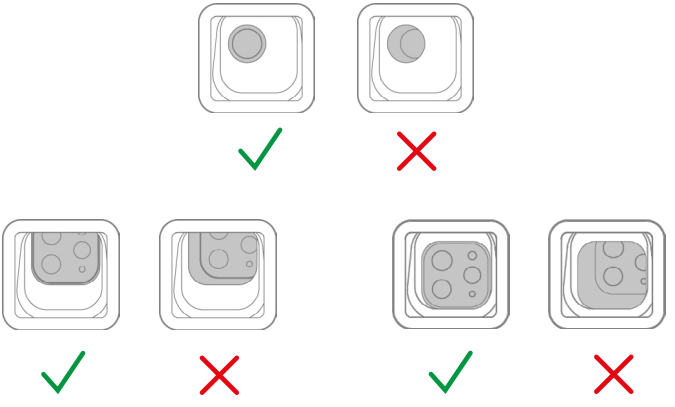

7. Maintain the position while tightening the bottom screw.

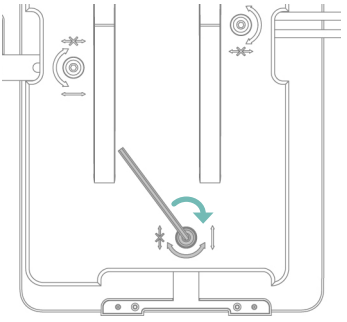

8. Slide the side arms towards the iPad. Maintain the centered position of the camera while fastening the screws in the correct order.

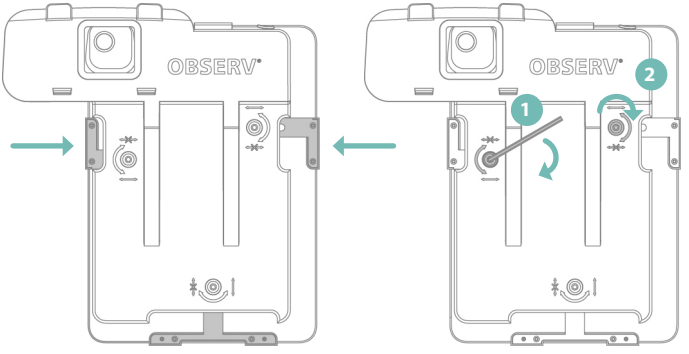

9. Place the allen key back into the bottom of the Universal iPad Visor.

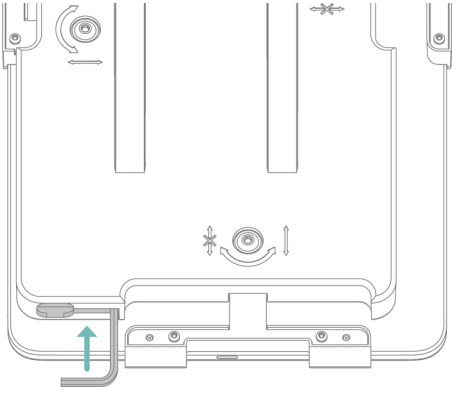

Lock

The lock on top of the Universal iPad Visor can be used to keep the top slider in a fixed position.

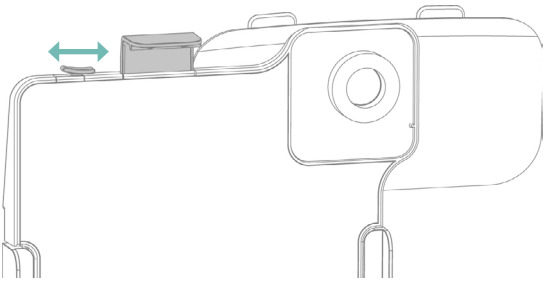

3.2 Getting the Software ready for use

Prior to using your Observ, make sure that the iPad you are using is a model supported by our App. Note that for image quality reasons we may choose to not support specific iPad models. As a consequence, you may not be able to capture pictures to perform an analysis. In doubt, please ask your distributor which iPad models we support at the time of your purchase.

Fit your iPad into the iPad visor and attach the visor onto your Observ as described in chapter 3.1 step 10.

3.2.1 Downloading the Observ App

The Observ comes with a specific App which can be downloaded free of charge from the App Store.

Observ 520x App

Search for "Observ 520x" in the App store and download the App accordingly.

3.2.2 Personalising the App

Your home screen shows the SYLTON® logo. You can change this logo to your own logo in the settings of the app.

3.3 Pairing / Unpairing your device

3.3.1 First time pairing

To pair your Observ device to the app follow the steps below:

1. Turn on your Observ device by pushing the Power button
2. Open the Observ App
3. Go to **Settings**
4. Tap **Device Options**
5. Tap **Pair with New Device**
6. A pop-up message "Pair new device!" will appear on your iPad screen
7. Press the Power button of your Observ once, it will pair automatically
8. The pop-up message will disappear if the device is paired properly
9. Your device's Serial Number will appear in the list of **Paired Devices**
10. You are now able to capture images

Note: You may pair as many devices as required to an iPad, however only the Observ 520x will be able to connect.

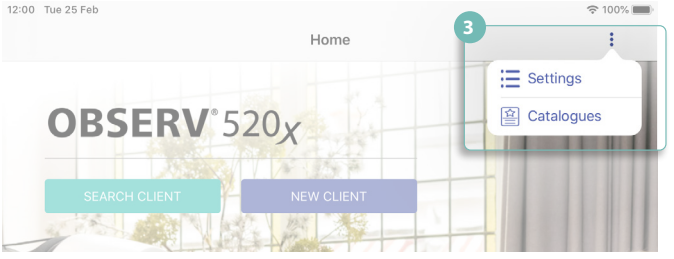

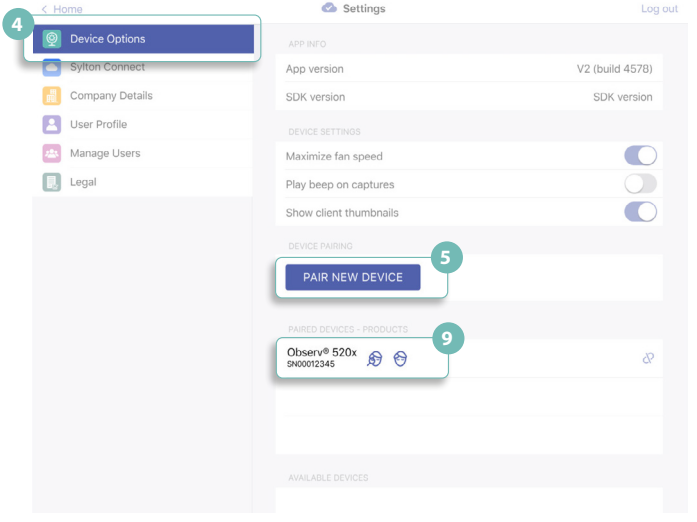

3.3.2 Selecting an Observ from multiple paired devices

When starting a new analysis and having more than one device paired and powered on, you need to select the Observ you want to capture the images with.

A pop-up message "Found more than one paired Observs!" will appear on your iPad screen.

Press the Power button of the Observ you wish to use for an analysis. The pop-up message should disappear. Your device and app are now paired properly and are ready for use.

3.3.3 Unpairing a device

To unpair an Observ, follow the below steps:
1. Open the App
2. Go to **Settings**
3. Tap **Device Options**
4. Press the **Forget** button next to Serial Number you wish to unpair
5. The device is no longer on the **Paired Devices** list
6. The device is now visible in the **Available Devices** list

Note: Only devices that are supported by your app can be paired.

3.4 Activation of the voucher

Your Observ needs to be activated by using the activation voucher(s). Based upon the selected configuration you either have to enter one or two voucher to activate the corresponding functionalities within the app. To activate the voucher follow the steps below:

1. Open the Observ app
2. Go to **Settings**
3. Tap **Sylton Connect**
4. Tap **+ Redeem voucher code** on the bottom of the menu.
5. Fill in the voucher code
6. A pop-up message "Transfer products to device" will appear on your iPad screen
7. Press the Power button of the Observ on which you want to activate the product
8. You are now able to use the product with this device.

The activated products on a device are visible in the **Device Options** page under Paired Devices - Products.

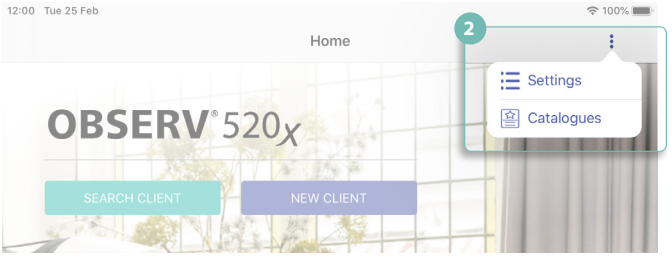
12:00 Tue 25 Feb
100%
Home
2
Settings
Catalogues
OBSERV® 520X
SEARCH CLIENT
NEW CLIENT

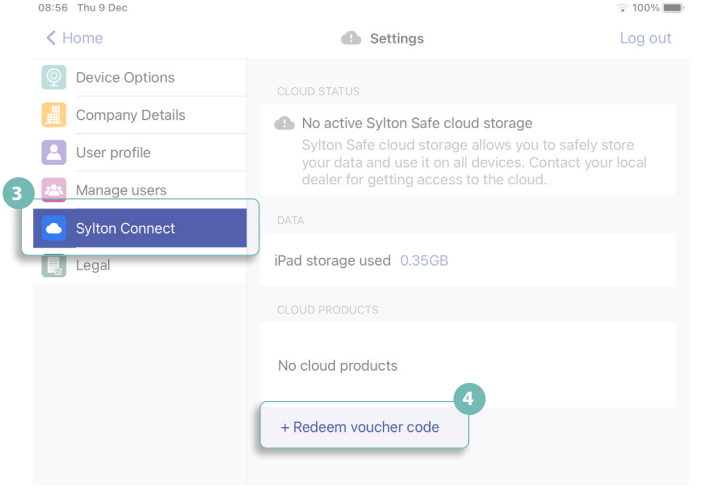
08:56 Thu 9 Dec
100%
Home
Settings
Log out
Device Options
Company Details
User profile
Manage users
3
Sylton Connect
Legal
CLOUD STATUS
No active Sylton Safe cloud storage
Sylton Safe cloud storage allows you to safely store your data and use it on all devices. Contact your local dealer for getting access to the cloud.
DATA
iPad storage used 0.35GB
CLOUD PRODUCTS
No cloud products
4
+ Redeem voucher code

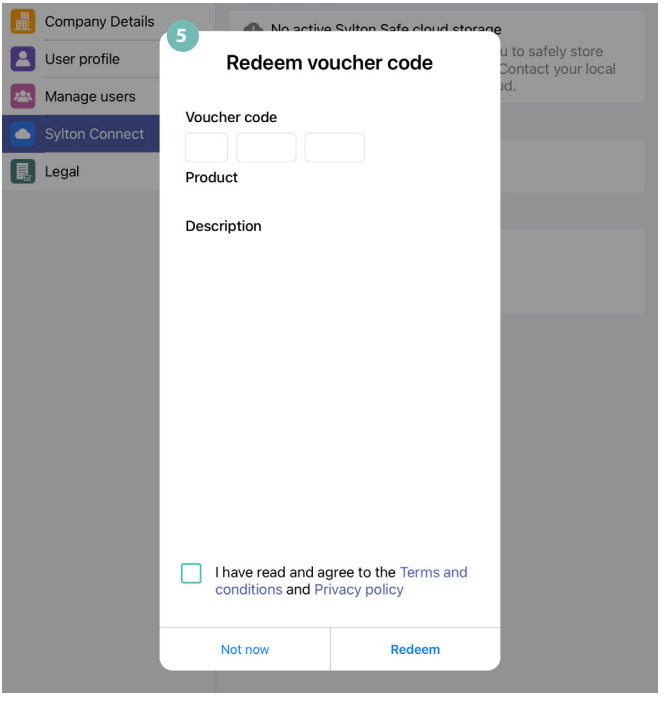
Company Details
User profile
Manage users
Sylton Connect
Legal
5
Redeem voucher code
Voucher code
Product
Description
I have read and agree to the Terms and conditions and Privacy policy
Not now
Redeem

4 The Observ in use

Your Observ is now ready for use.

4.1 Starting a consult

Provide the possibility for the patient to sit comfortable in front of the Observ, as described in chapter 4.2. Move the chinrest in the desired position as described in chapter 4.3. Ask the client to position their head into the lightshade and to place the chin on the chinrest. Close the lightshade as described in chapter 4.4. Let the patient position themselves with the help of the Face Positioning System as described in chapter 4.5. If the patient is wearing glasses, ask for the glasses to be removed. This will give you an unobstructed view of the eye area.
When you are using the 360 Light chinrest there are additional instructions for positioning in the 360 Light chinrest manual.

Now the setup is ready to start the image capturing process. This will take around ten seconds. Instruct your patient to sit still and do not blink during the capturing. The app will guide you through the consultation. When capturing the images ask the patient to look at the Face Positioning System. In the manual mode the patient can follow the analysis by looking in the mirror on the inside of the device.

4.2 Ergonomic patient setting

Make sure your patient can sit with a straight back. This can be achieved by a chair that is adjustable in height or by using the adjustable and movable Observ Mobile Stand which is sold seperately.





4.3 Using the chinrest for side view pictures

In addition to the frontal view, the chinrest can be adjusted to different positions to support 40 and 90-degree views of the face. To capture the 40° view left side of the face, slide the arm (part A) of the chinrest one step to the right and rotate the chincup (part B) one step clockwise.

To capture the 90° view left side of the face (profile pictures), rotate the chincup one step further clockwise from the previous position.

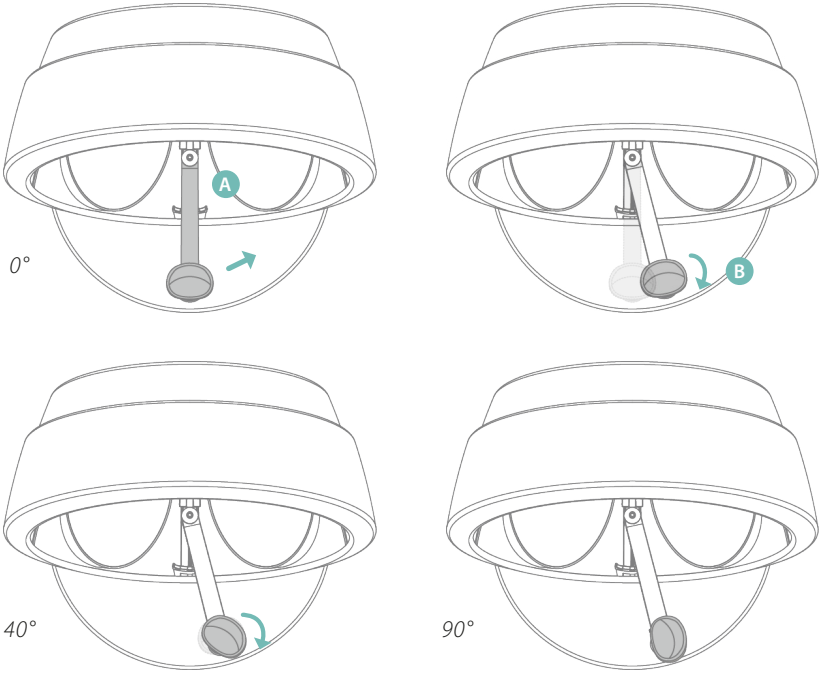

4.4 Placing the lightshade

It is important to use the lightshade to block any environmental light affecting the pictures captured. Make sure there are no luminous elements in the viewing area, such as shiny earrings, glasses or a raised collar, headband or headscarf in a white colour or with white elements.

Ensure that the lightshade is attached to the device properly and the fabric is closed via the magnets under the chin. For the best results, you can provide the Observ headband and cape to the patient. These are specifically designed to prevent illumination.







4.5 Positioning your client

The Observ is equipped with a patented Face Positioning System (FPS) that will facilitate the positioning of your client via visual feedback.

Prior to capturing images, instruct your client not to move during the capturing process. Beware, your client may not hear you when positioned in the Observ.

The Observ has the FPS for the 0° frontal and for both the 40° views. The 90° view is not supported by the FPS. When selecting the 0° or 40° angles, the corresponding FPS turns on.

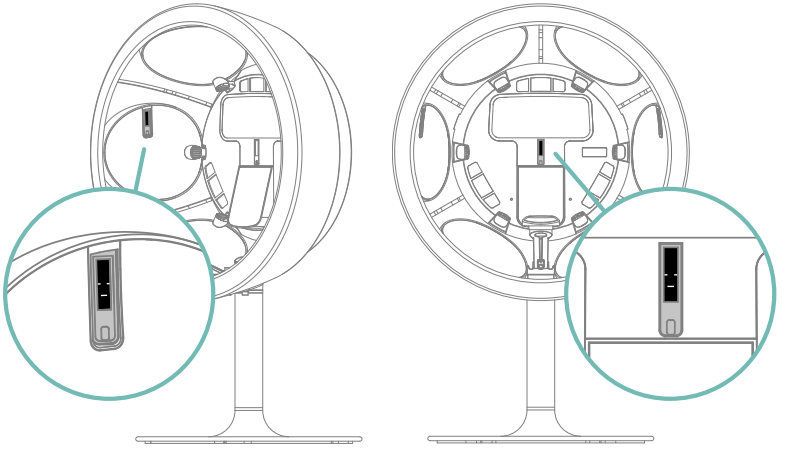

The lines in the FPS screen indicate the correct and wrong positioning of the face. The client needs to position the head so that the lines in the screen form one line. When the middle line is too high instruct your client to tilt the head in such a way that the forehead moves forward. When the middle line is too low, advise your client to tilt the head in such a way that the forehead moves backward.



Head tilted backward

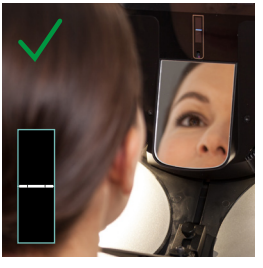

Correct



Head tilted forward

4.6 Manual mode

If you want to take a look at your client's skin with your own eyes, not using the iPad, the Observ offers usage in manual mode. To use this mode attach the polarisation visor onto the Observ.

4.6.1 Using the polarisation visor

Use the handle (A) to tilt the polarised screen in order to switch between normal view and cross/parallel polarised view. Lower the polarisation screen by moving up the handle when using the cross- and parallel light modes.

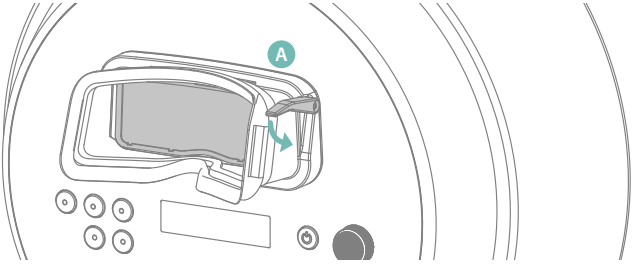

4.6.2 Manual mode operation

If the client is wearing glasses allow them to view their skin for a short time, then ask for the glasses to be removed. This will then give you an unobstructed view of the eye area.

To use the manual mode, follow the below instructions:

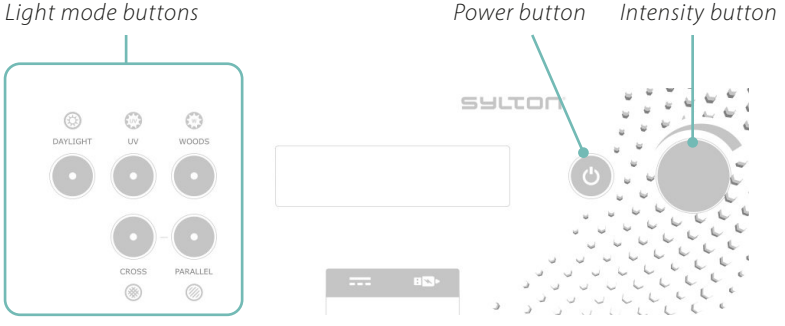

1. When the power adapter is connected, the power button will turn yellow.
2. Press the power button to power on the device into standby mode, the power button will turn blue. Now all light mode buttons can be used.

3. Select a light mode button:
   a. DAYLIGHT, Daylight mode (full spectrum lighting)
   b. UV, True UV mode
   c. WOODS, Simulated Wood's mode
   d. CROSS, Cross-Polarised mode*
   e. PARALLEL, Parallel-Polarised mode*

4. When a mode is turned on, the intensity button can be used to increase or decrease the intensity of the chosen mode. For your convenience, the device will remember the last value used in each mode:
   a. DAYLIGHT, Daylight LED intensity
   b. UV, True UV LED intensity
   c. WOODS, Wood's emission spectrum adjust
   d. CROSS, Cross-Polarised LED intensity*
   e. PARALLEL, Parallel-Polarised LED intensity*

5. Press the power button to return to standby mode. The device will beep.
6. When in standby mode, the Observ will auto power off in 4 minutes.
7. When in a lighting mode, the Observ will automatically return to the standby mode when the timer on the display is finished.

* When using the cross- or parallel light mode, make sure the polarisation screen in the polarised view visor is moved into place.

4.6.3 Light mode intensity

Within a manual consultation, the intensity of the light sources can be set at various intensities. It is advised to level the intensity of all modes in such a way that from the client's perspective the brightness of the lights appears the same. This way the eyes of the client do not need to readjust when illumination modes are switched, and the client's comfort is maintained. The base setting of the Wood's light is at the "0" setting. We advise to start with the following reference settings:

Daylight intensity	5%
True UV intensity	100%
Simulated Woods balance	0
Cross polarisation	25%
Parallel polarisation	25%

4.6.4 Display states

1 Standby mode:



The display shows the Observ model, serial number and firmware version

2 Daylight mode:



The display shows the light mode, the intensity value and graphic, the time until standby

3 True UV mode:



The display shows the light mode, the intensity value and graphic, the time until standby

4 Simulated Wood's mode:

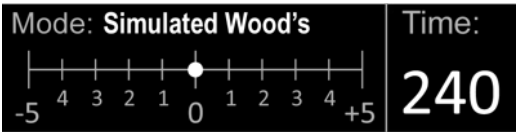

The display shows the light mode, adjustment of the wood's emission spectrum, the time until standby

5 Cross-Polarised mode:

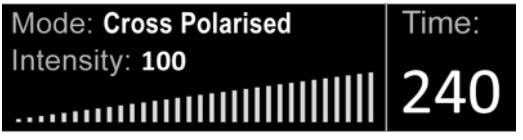

The display shows the current mode, the intensity value and graphic, the time until standby

6 Parallel-Polarised mode:

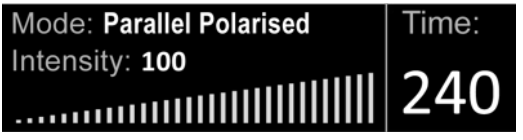

The display shows the current mode, the intensity value and graphic, the time until standby

7 Bluetooth mode:



The display is black when connected to an iPad.

5 Trouble shooting

- **Device does not power on:**
  Check if the device is connected with the provided power adapter which is connected to the power supply.

- **Device buttons do not respond when the device is turned on:**
  Make sure the Observ is not connected to a Bluetooth device. Stop the Observ App on the iPad to regain manual control over the device.

- **Chinrest will not attach properly:**
  Untighten the screw on the chinrest to make sure it can slide all the way down. When it is positioned all the way down, the screw can be tightened again.

- **iPad does not fit properly in visor:**
  Check if the universal visor has the correct settings. Reposition the arms in the correct position by following the instructions in chapter 3.1.1. Check if the correct camera sticker is placed. Make sure that the top slider is not locked.

- **The app does not pair with the Observ:**
  Check if the Observ is powered on. Make sure that in your iPad settings the bluetooth is switched on, the bluetooth is allowed to make a connection and the airplane mode is off. And check if in the app settings on your iPad the app is allowed to use bluetooth.

- **In case the images are vague, distorted or appear blurry please check the list below for possible solutions:**
  - Clean the camera lens of your iPad with a soft towel
  - Clean the lens of the iPad visor with a soft towel
  - Check if there is no residue left from the protective foam on the lens of the iPad visor
  - Check if the protective film inside the Observ is removed from the transparent screen
  - Clean the transparent window inside and outside of the Observ

If problems keep recurring, or the product does not work as specified, stop using the device and contact your distributor.

6 Declaration of conformity

OBSERV® 520x

EU DECLARATION OF CONFORMITY (DOC)

We	**InnoFaith Beauty Sciences**
Address	**SciencePark 5204b, 5692 EG Son, The Netherlands**
Contact e-mail address	**w.d.arkesteijn@innofaith.com**

declare that this DoC is issued under our sole responsibility and that this product:

Product description	**Beauty Advisory Tool**
Type designation	**OBSERV 520x**
Trademark	**Sylton®**

Object of the declaration is in conformity with the relevant Union harmonization legislation

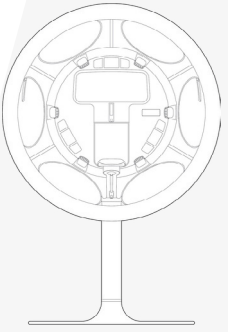

Radio equipment directive **2014 / 53 / EU**
with reference to the following standards applied
EN 300 328 v2.2.2
EN 301 489-1 v2.2.3
EN 301 489-17 v3.2.4
EN 62479: 2010
EN 62368-1: 2020+A11: 2020

The notified Body Kiwa Nederland B.V., with notified Body number 0063, has issued under the conformity assessment procedure as described in Annex III of the Directive, the EU-type examination certificate: **232140005/AA/00**

Signed on behalf of:

Son, The Netherlands 28-11-2023
Place and date of issue

Walter Arkesteijn, CTO
Name, Function, signature

SYLTON®

UK DECLARATION OF CONFORMITY (DOC)

We	**InnoFaith Beauty Sciences**
Address	**SciencePark 5204b, 5692 EG Son, The Netherlands**
Telephone number	**+31402908160**

declare that this DoC is issued under our sole responsibility and that this product:

Product description	**Beauty Advisory Tool**
Type designation	**OBSERV 520x**
Trademark	**Sylton®**

Object of the declaration

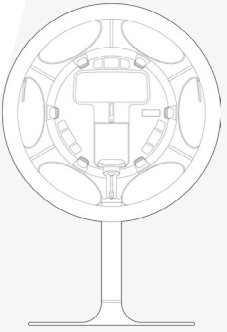

is in conformity with the relevant Radio Equipment Regulation **2017**
with reference to the following standards applied
EN 300 328 v2.2.2
EN 301 489-1 v2.2.3
EN 301 489-17 v3.2.4
EN 62479: 2010
EN 62368-1: 2020+A11: 2020

The UK Approved Body Kiwa Ltd., with Approved Body number 0558 performed:
Modules: B+C. Where applicable: The issued UK type examination certificate:
232340004/AA/00

Signed on behalf of:

Son, The Netherlands 01-02-2024
Place and date of issue

Walter Arkesteijn, CTO
Name, Function, signature

SYLTON®

7 Regulatory information

7.1 FCC and IC compliance Statement

Compliance Statement (Part 15.19)
This device complies with Part 15 of the FCC Rules. Operation is subject to the following two conditions:

1. This device may not cause harmful interference, and
2. This device must accept any interference received, including interference that may cause undesired operation.

Warning (Part 15.21)
Changes or modifications not expressly approved by the party responsible for compliance could void the user's authority to operate the equipment.

FCC Interference Statement (Part 15.105 (b))
This equipment has been tested and found to comply with the limits for a Class B digital device, pursuant to Part 15 of the FCC Rules. These limits are designed to provide reasonable protection against harmful interference in a residential installation. This equipment generates uses and can radiate radio frequency energy and, if not installed and used in accordance with the instructions, may cause harmful interference to radio communications. However, there is no guarantee that interference will not occur in a particular installation. If this equipment does cause harmful interference to radio or television reception, which can be determined by turning the equipment off and on, the user is encouraged to try to correct the interference by one of the following measures:

- Reorient or relocate the receiving antenna.
- Increase the separation between the equipment and receiver.
- Connect the equipment into an outlet on a circuit different from that to which the receiver is connected.
- Consult the dealer or an experienced radio/TV technician for help.

This portable transmitter with its antenna complies with FCC/IC RF exposure limits for general population / uncontrolled exposure.

Section 8.4 of RSS-GEN

This Device complies with Industry Canada License-exempt RSS standard(s). Operation is subject to the following two conditions:

1. this device may not cause interference, and
2. this device must accept any interference, including interference that may cause undesired operation of the device.

Le présent appareil est conforme aux CNR d'Industrie Canada applicables aux appareils radio exempts de licence. L'exploitation est autorisée aux deux conditions suivantes:

1. l'appareil ne doit pas produire de brouillage, et
2. l'utilisateur de l'appareil doit accepter tout brouillage radioélectrique subi, même si le brouillage est susceptible d'en compromettre le fonctionnement.

8 Technical specifications

Dimensions (LxWxH)	32 x 43 x 63 cm
Storage / travel dimensions	46 x 45 x 19 cm (packed in bag)
Weight	11,2 kg
iPad control	Bluetooth 4.1 LE
Illumination technology	Solid state LED
Power	36 Watts; 24V; 1,25 A
Voltage	Global 110-240 V, 50-60 Hz
Plugs	Global plug set
Transmitting frequency	2400 – 2483,5 MHz
Maximum transmitted power output	1.8 dBm Eirp
Timer	Automatic
Manual control	Via Polarization visor
Capturing time	Average 10 sec.
Operating temperature	0 °C to +40 °C, 10%RH to 90%RH
Illumination modes:	Daylight, Cross-Polarisation, Parallel-Polarisation, Simulated Wood's, True UV
Visualisation modes	Surface Texture, Pigmentation, Vascularity
Observ520x app available in App store	

SYLTON®

Sylton® and Observ® are registered trademarks of the Symae® technologies holding B.V. Patents granted and pending. Registered design. Apple, iPad, iTunes are trademarks of Apple Inc., registered in the U.S. and other countries.

www.sylton.com 677-713-3 (EN)